IN SITU ROCK DEFORMABILITY TESTS AT THE ROCKY MOUNTAIN PUMPED HYDRO PROJECT

Khosrow Bakhtar* and Nick Barton**

*The Earth Technology Corporation
3777 Long Beach Boulevard, Long Beach, California 90807
**Norwegian Geotechnical Institute, Oslo, Norway

ABSTRACT

Two plate load tests of 1 m^2 area were performed in a pressure tunnel at the Rocky Mountain Pumped Hydro Project. Reaction for the 250 tons loading in this 10.5 meter diameter tunnel was provided by deeply anchored, diverging rock bolts, eight per load frame. Pressure build up to 2.5 MPa was provided by circular flatjacks. Rock deformation was recorded at depths of approximately 0.3, 0.9, 1.2, 1.8 and 3.3 meters using axially located multiple position borehole extensometers.

The tests were performed in representative units of massive shale and thin to medium bedded siltstone. Stress was built up in four equal steps to 2.5 MPa, held constant for one week for creep monitoring, then unloaded, reloaded and unloaded over a period of one day.

The most deformable unit was the massive shale which exhibited 1.3 mm of permanent deformation at the surface after the first loading and unloading cycle, which included 0.36 mm of creep. After the second loading-unloading cycle, the permanent deformation had increased to 2.6 mm, following a maximum deformation at the surface of approximately 3.6 mm. At the maximum stress of 2.5 MPa, the tangent modulus averaged 0.4 GPa when loading, and 0.3 GPa when unloading. The thin to medium bedded siltstone exhibited only 0.17 mm of permanent deformation at the surface after the first loading-unloading cycle, which included only 0.05 mm of creep. After the second loading-unloading cycle, the permanent deformation had increased to 0.27 mm, following a maximum deformation at the surface of approximately 0.53 mm. At the maximum stress of 2.5 MPa, the tangent modulus averaged 6.2 GPa when loading and 21.9 GPa when unloading.

INTRODUCTION

Two plate loading tests were conducted in the pressure tunnel of the Rocky Mountain Pumped Hydro Project in February of 1983. The purpose of these tests was the determination of the in-situ static modulus of deformation of the rocks at two different locations in the pressure tunnel, to assist in the design of the tunnel lining. These two locations were marked STATION 1923 and STATION 1576, respectively. Stress measurements were also conducted at the same site, using the minifrac technique. These tests are reported elsewhere (Barton 1983).

The loading system used to test the rocks were identical at both stations. To cut down the cost, manually controlled hydraulic loading systems, as well as mechanical read-out systems, were employed. This paper outlines the deformability tests conducted at the above stations, provides recommendations drawn from the tests, and gives a brief comparison of the results obtained from the two locations.

The deformation properties in the direction of applied load from radial water pressure were of interest in this investigation. Two sturdy loading frames with associated circular flatjacks were used to apply the uniaxial load. Multi-position borehole extensometers (MPBX) were used to monitor the deformation as a function of applied load.

SITE GEOLOGY

The rocks in the vicinity of the STATION 1923 consisted of a 20 m thick layer of moderately hard, thin to medium bedded siltstone with occasional calcareous sandstone laminae. The sandstone laminae and the siltstone are mostly gradational.

In the vicinity of the STATION 1576, the rock consisted of massive gray organic shale with occasional thin sandstone laminae. The rock cleaved readily along bedding.

Analysis of Master Joints

Analysis of master joints in shale and siltstone, STATION 1923 and STATION 1576, from the exploratory-drainage tunnel indicated that there was one dominant set which had an average strike of N67°E and ranged from N60°E to N75°E with an average dip of 70° to the Northwest. Geological mapping in the exploratory drainage tunnel further indicated that the master joint set occured as joint swarms in which the joints were closely spaced over a distance of 1.3 to 2 m, then little or no master joints for 3 to 4 m.

Recovered Cores

The recovered cores from the MPBX holes, STATIONS 1923 and 1576, showed the existence of at least two joints within the depth of 1.3 m and 2 m from the prepared test surfaces.

INSTRUMENTATION

Reaction Frames

Two sturdy reaction frames were designed and constructed for accommodating the flatjacks. Figure 1 shows the overall dimensions of these units. Each frame consisted of two circular plates welded together by means of eight steel webs. A set of eight cylindrical steel guides were welded at the end of the webs to provide support for the bolts to hold the frames in place. A central hole (0.15 m I.D.) in the frames provided the necessary access to the axial NX holes drilled in the tunnel wall and to the MPBX heads.

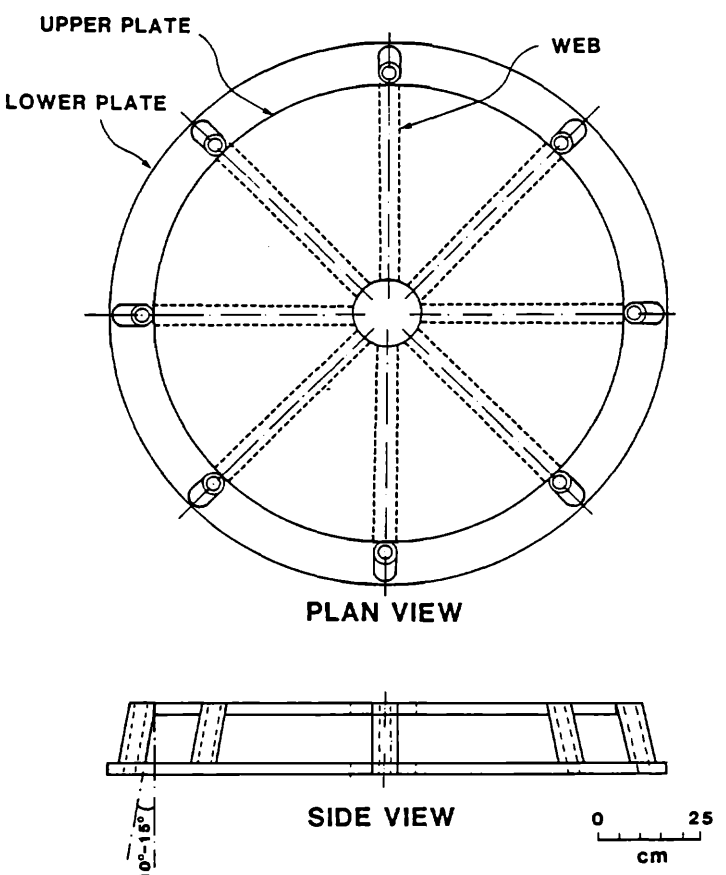

Figure 1. Approximate dimensions of reaction frame.

Measuring Displacement

Five-rod MPBX were used for measuring displacement at five points along the borehole length at each test station. The longest rods were approximately 6 m in length, with 2.3, 1.4, 1, and 0.3 m lengths used to reach the shorter anchorage points. A snap ring anchor was fixed to the downhole end of each rod and the rods were passed through the holes provided in each successive anchor head. The extensometers were installed in the tunnel walls prior to installation and anchoring of the reaction frames.

Deformability Tests

The load of 250 tons was applied by means of three flatjacks sandwiched together between the lower platen of the loading frame and mortared, smooth tunnel wall. Figure 2 shows the line diagram of the open loop hydraulic system used to pressurize the flatjacks. The system pressure was controlled by means of a hand pump, a series of valves and two pressure transducers.

INSTALLATION

Extensometer Rod Assembly

The extensometer rods were each assembled separately with snap ring anchors installed at the ends. When all the rods were in the holes, the extensometer head was slid into the hole at each station and subsequently grouted around the collar. This was done by injecting cement around the circumference of the drill hole.

Loading Frames

The loading frames were initially used as templates for drilling the rock bolt holes on the tunnel wall. The circular flatjacks were glued to each frame and covered with a 0.06 m thick circular plate and a 0.18 m thick circular particle board. Prior to installation of the reaction frames, resin cartridges were fed into the end of each rock-bolt-hole according to the hole length, and eight 6-m long bolts were installed through the guide tubes on each reaction frame to hold them in place. A diagram showing the general setup used on each site during testing is shown in Figure 3.

Influence on Loaded Volume

The 250 tons maximum load generated by the flatjacks was resisted by the eight peripheral rock bolts of 6 m length. These were installed at a 15° diverging angle from perpendicular so as to have the minimum possible influence on the loaded volume of rock. Only their ends were grouted to prevent tensile stresses from developing in the loaded volume.

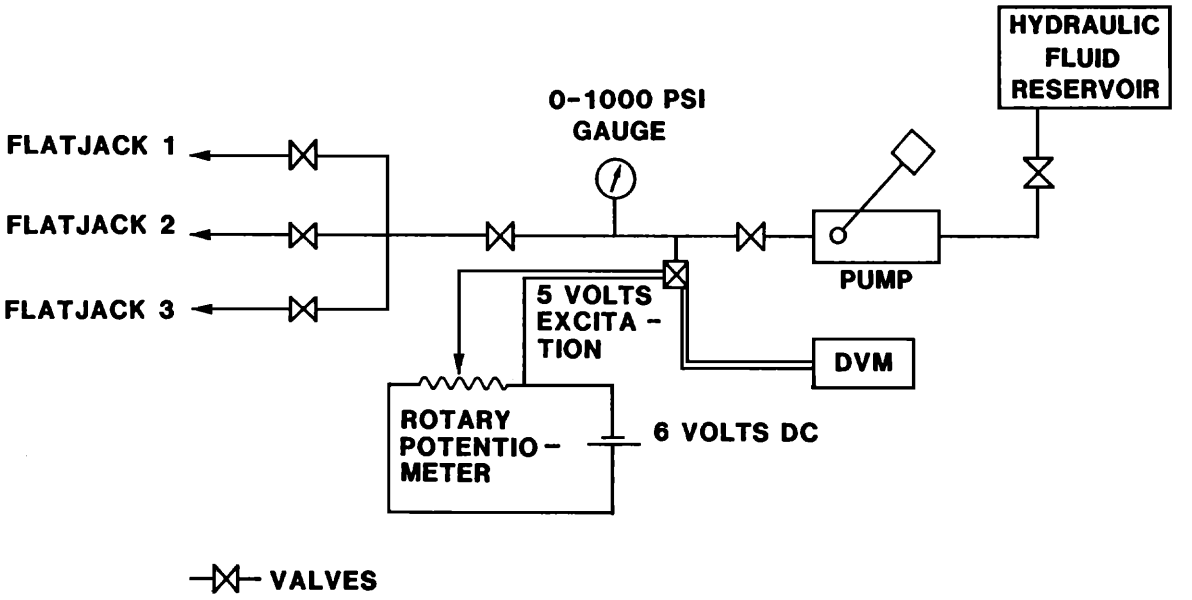

Figure 2. Line diagram of the hydraulic loading system.

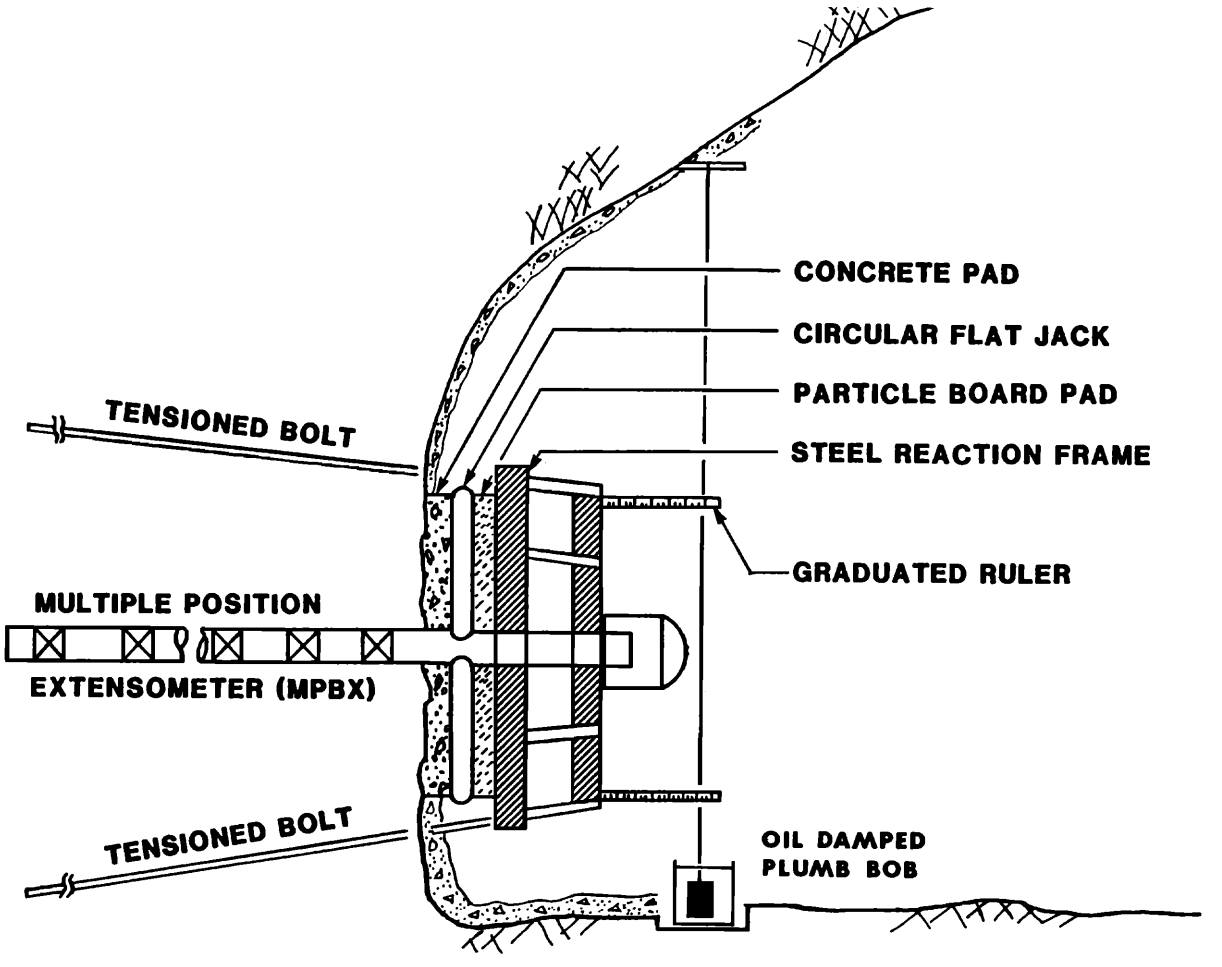

Figure 3. Schematic of the test setup.

LOADING AND DATA ACQUISITION

Before pressurizing the flatjacks, the air in each system was bled off by opening the bleed valves and pumping up the system. Testing started at each location by initially applying a small seating, load cycled twice, which was left on for about 15 minutes. The zero readings for the main testing were then taken. The load was applied continuously up to a target load of 2.5 MPa $\pm$ 6%. At 25%, 50%, and 75% of the target pressure, the load was kept constant and displacement readings, as well as relative movement readings of the frame, were taken over a time interval of five minutes. After this, the load was increased to the next stage for a similar set of readings.

Target Load

The target load was kept constant for a period of seven days to study the creep response. During this period, readings were taken approximately every four hours. Following the completion of the creep tests, the system in each location was unloaded to 75%, 50%, and 25% of the target loads and displacement readings were taken over the same time intervals as for loading. To further study the rock behavior, a second loading-unloading cycle was followed similar to the first cycle, but without the intervening creep test.

ANALYSIS AND RESULTS

Data Obtained During Tests

Data obtained during the tests were reported as a function of depth and pressure. Figures 4 and 5 represent the overall load-deformation curves from the two sites tested. Deformation measurements for various load cycles were utilized to compute deformation moduli. The elastic solution for a uniformly distributed pressure on a circular area was utilized. Based on this theory, the displacement (W) at any point beneath the center of area can be expressed in terms of modulus (E), Poisson's ratio (ν), pressure (P), and the radius of loaded area (r). For a uniformly distributed load on a circular area with a hole in the center, the expression simplifies to

$$W(Z = 0) = \frac{P}{E}(K_Z) \qquad (1)$$

Displacement

If displacement W(Z1) and W(Z2) are measured with MPBX at depths Z1 and Z2, the deformation modulus of the rock between these two depths can be calculated from:

$$E = P\left[\frac{K(Z1) - K(Z2)}{W(Z1) - W(Z2)}\right] \qquad (2)$$

Relevant Values

The relevant values of K(Z1) and K(Z2) depend on the values of r(1), inner radius of flatjack, and r(2), outer radius of flatjack (refer to ISRM, 1981. The authors discovered an error in this publication which has since been acknowledged by the ISRM working group.)

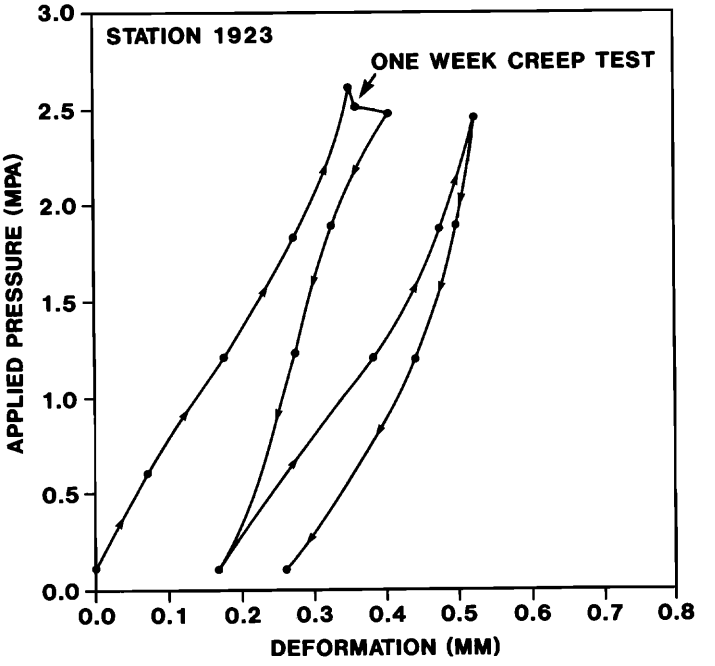

Figure 4. Rock surface deformation as a function of applied pressure for unit 16, massive shale.

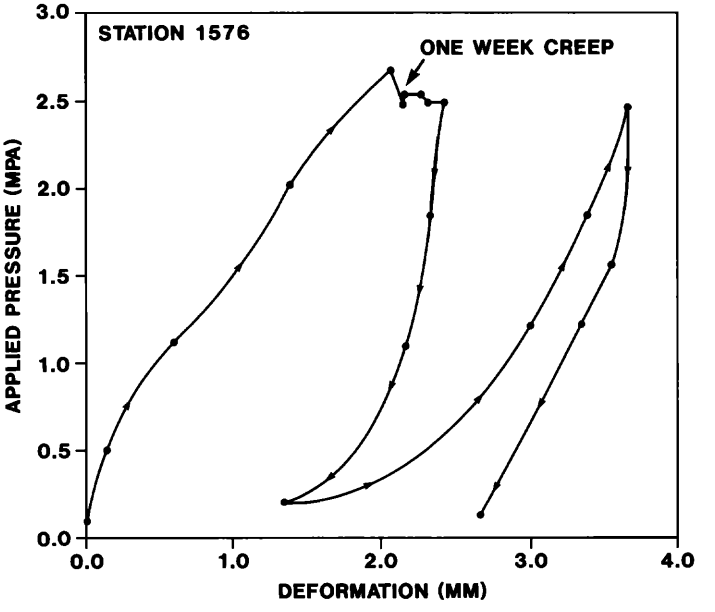

Figure 5. Rock surface deformation as a function of applied pressure for unit 15, thin to medium bedded siltstone.

DISCUSSION

Poisson's Ratio

A Poisson's ratio of 0.25 was used to compute tangent moduli for both loading and unloading cases. The average loading moduli obtained at the highest stress (2.5 MPa) varied from 0.4 GPa for the shale to 6.2 GPa for the siltstone. Comparison of these data with the laboratory values quoted in Design Memorandum (Southern Company Services) suggests that excavation damage to the shale is much more marked than for the siltstone. Moduli reduction factors, E(in-situ)/E(lab), of approximately 0.03 and 0.37 are indicated for shale and siltstone, respectively. The reason for this may be the low tensile strength of the incipient fabric in the shales, which are readily opened by blast damage.

Results

The most deformable unit (massive shale), demonstrated a tangent modulus which averaged 0.4 GPa when loading, and 0.3 GPa when unloading. The value of the tangent moduli for the siltstone were 6.2 GPa and 21.9 GPa for loading and unloading, respectively. As a result of the low values of modulus in the shale, and low minimum stress value in this unit, conservatism was advised for design of the concrete liner for the section of tunnel passing through this unit.

ACKNOWLEDGEMENTS

The work reported in this paper was performed when both authors were working for Terra Tek, Inc. in Salt Lake City, Utah. The funding was provided by Southern Company Services. The assistance of Richard Lingle and Scott Woodhead is gratefully acknowledged.

REFERENCES

Barton, N., 1983, Hydraulic Fracturing to Estimate Minimum Stress and Rock Mass Stability at a Pumped Hydro Project, Proceedings of a Workshop on Hydraulic Fracturing Stress Measurements, National Academy Press, Washington, D.C.

ISRM Suggested Methods, Rock Characterization Testing and Montoring, Pergamon Press, 1981.